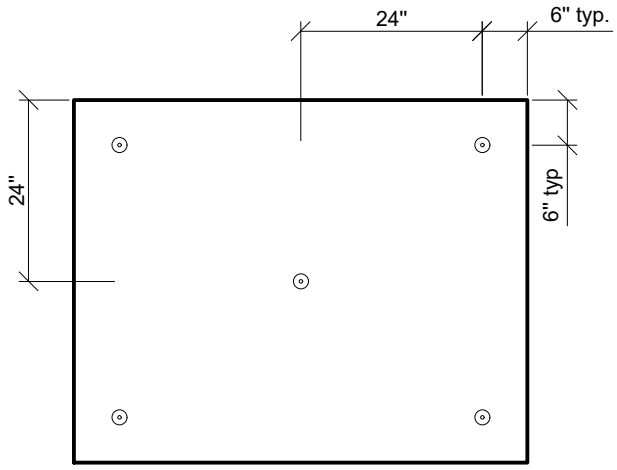

5 fasteners per board

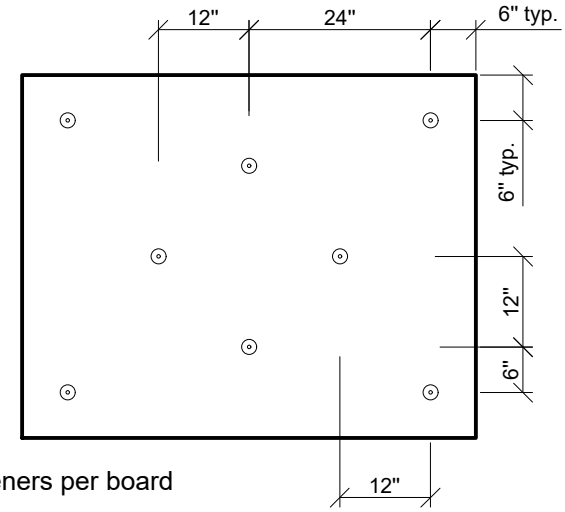

8 fasteners per board

Unit: inch

For most projects, the required amount of mechanical fasteners varies from zone to zone. For more details, consult the Wind Uplift Resistance Testing reports according to Canadian standard CSA A123.21.14 or publications according to FM4470 (RoofNav Database) including recommendations for corners and perimeters listed in the PLPDS 1-29 from Factory Mutual.

COPYRIGHT 2020 SOPREMA

1688, J-B Michaud Drummondvile, QC J2C 8E5 WWW.SOPREMA.CA

Title:		
FASTENING PATTERNS AS PER CSA - SOPRABOARD 4x5 ft		
Scale:	Date:	Drawing number:
N.T.S.	Oct. 2020	SOP172-01